SWITCH TYPE	Micro Switches	MODEL NO.	SM5-76N-**

1. Functional spec.			
1.1 Rated Voltage	125/250VAC	1.6 Free Position	15.0±1.0mm
1.2 Rated Current	5A	1.7 Operating Position	13.8±1.0mm
1.3 Contact Resistance	≤50mΩ (Initial value)	1.8 Position Travel	
1.4 Operating Force	(**)gf	1.9 Return Force	
1.5 Bounce Time		1.10	
2.Reliable Rating			
2.1 Mechanical Life	100,000 CYCLES	2.5 Soldering Technic	Hand Soldering
2.2 Electrical Life	10,000 CYCLES	2.6 Operating Temper	-25℃ - +85℃
2.3 Insulation Resistance	≥100MΩ DC500V (Initial value)	2.7 Ambient Humidity Used	<85%RH
2.4 Withstand Voltage	AC1000V 1 minute(Initial value)	2.8	

3. Dimension Drawing

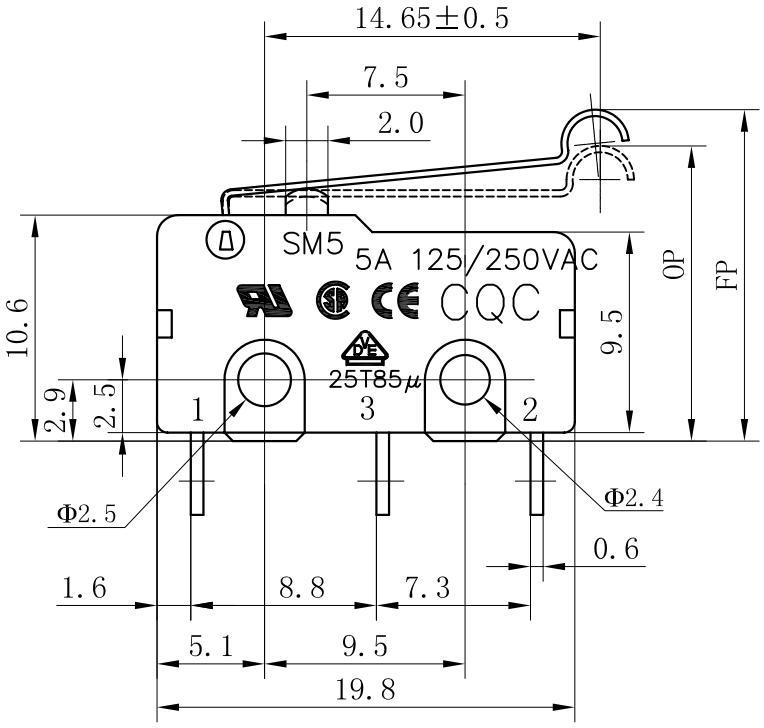

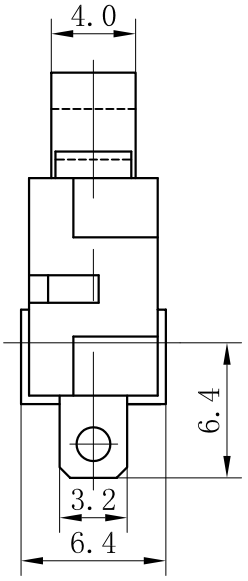

SCHEMATIC

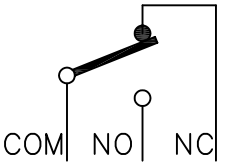

Revision	Description			Date	Revisor
Drawing No.			C/0	Tolerance	±0.2
Drawing Model.	SPECIFICATION OF STANDARD TYPE			Unit	mm
Prepared		Reviewed		Approved		Effective date	