毅永企業有限公司 E-YUNG ENTERPRISE CO., LTD.

CDR-3303

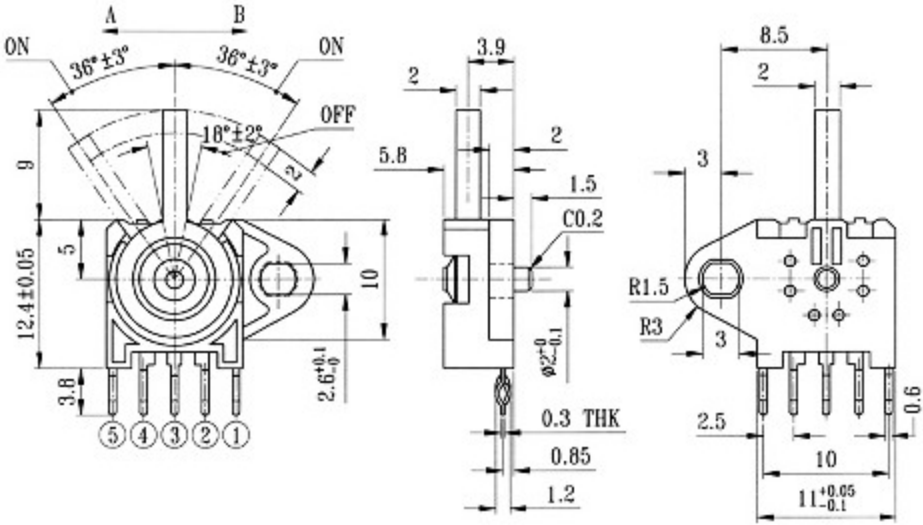

CIRCUIT DIAGRAM

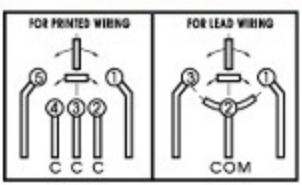

SPECIFICATIONS

1. RATING: 0.1A 12V DC
2. OPERATING FORCE: 70gf
3. INITAL CONTACT RESISTANCE 100mΩ MAX