毅永企業有限公司 E-YUNG ENTERPRISE CO., LTD.

REV	ZONE	REVISION	DATE

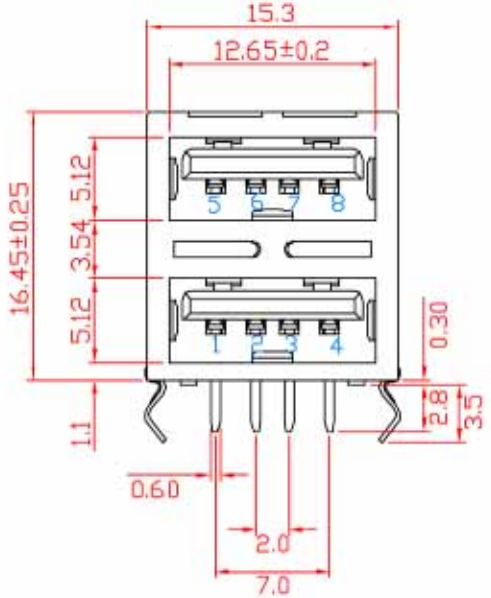

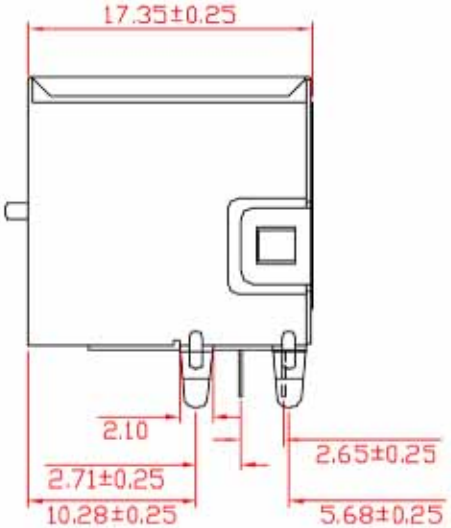

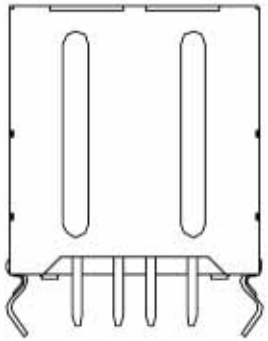

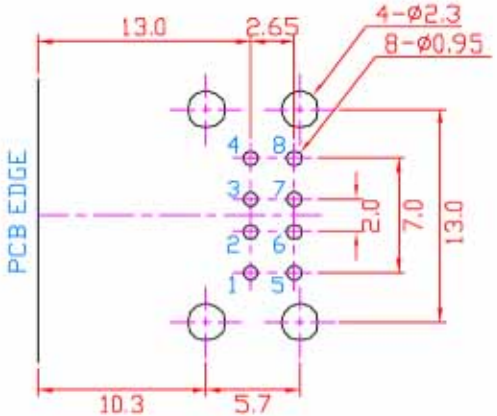

PCB LAYOUT
(BOTTOM VIEW)

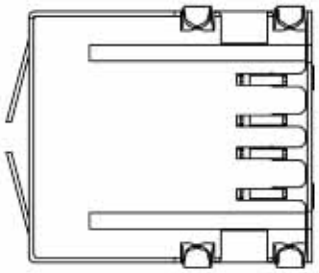

Specification:

Contact Resistance: 30m Ohm Max.

Insulation Resistance: 1000M Ohm Min. At 500VDC.

Rated Voltage And Current: 1.5A At 250VAC Minimum.

Dielectric Withstanding Voltage: 750V AC (rms) for 1 Minute(Rev. 1.1).

Durability (Life Test): 1500 Cycles.

Insertion Force: 35 Newtone Maximum.

Extraction Force: 10 Newtone Minimum.

NO.	NAME	MATERIAL	FINISH	Q'TY	REMARK
1	HOUSING	PBT G.F.	BLACK	1	
2	PIN TERM.	PHOS. BRONZE,T:0.25	GOLD-TIN PLATED	8	Gold1-3u"; Ni40-60u"; TIN120u" (98% pure Tin of lead Free plating)
3	SHELL	BRASS,T:0.3	NICKEL PLATED	1	Ni: 80~120u"