EY-506-C

(3.5mm)

BUSHING	THREATED
BUSHING COLOR	NICKEL
CONTACT FORM	3

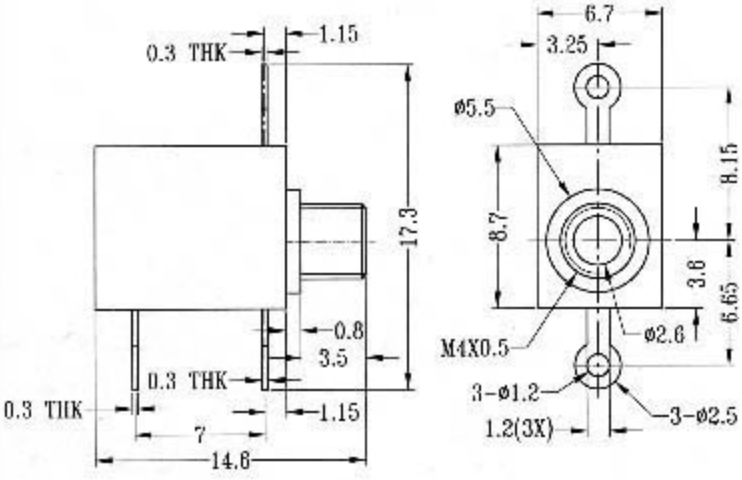

CIRCUIT DIAGRAM

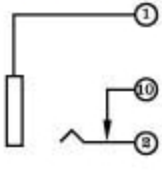

SPECIFICATIONS

Optional Accessory:AZ-005
Rating : 0.3A 30V DC
Functon:Mono