毅永企業有限公司 E-YUNG ENTERPRISE CO., LTD.

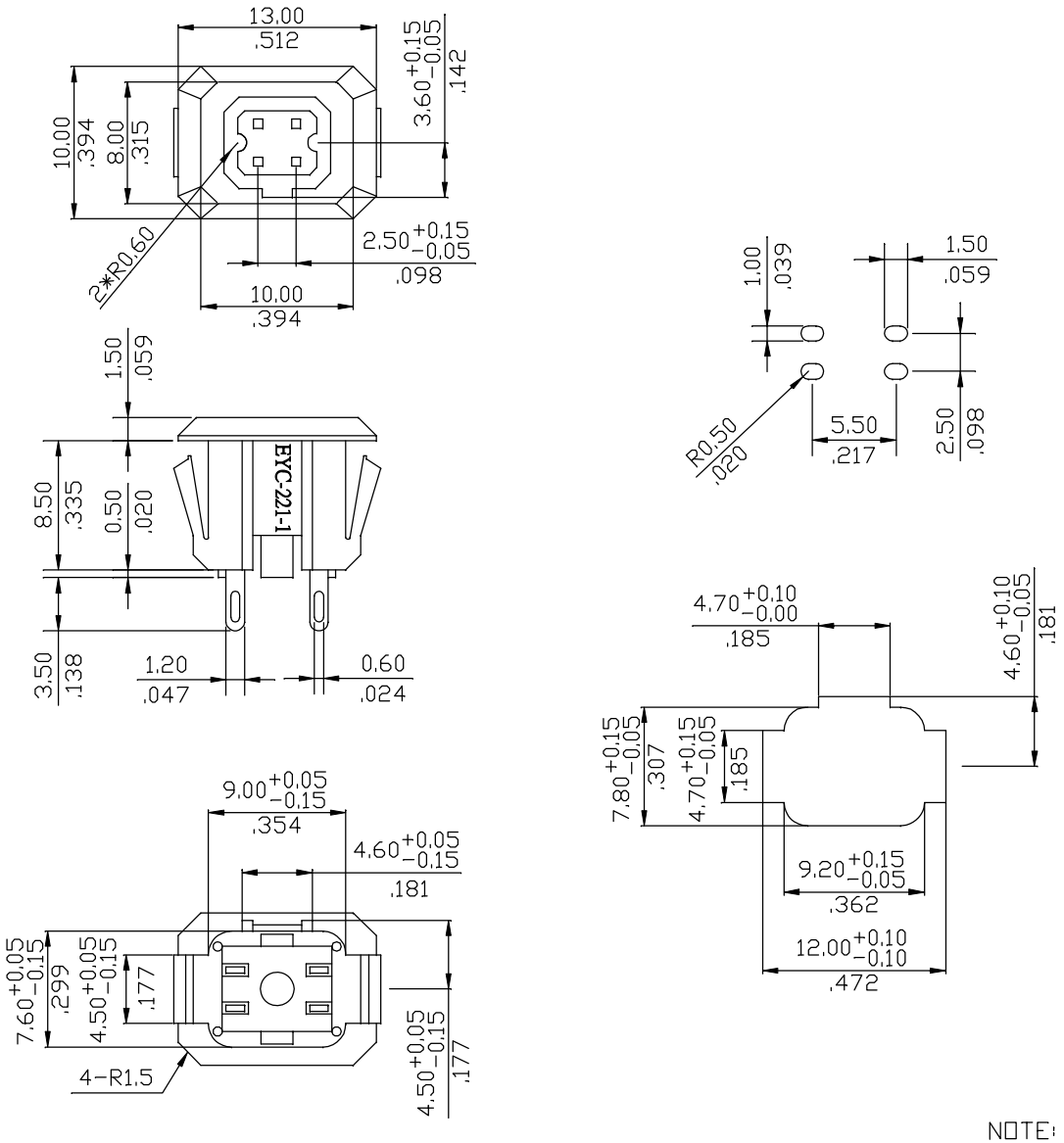

AC.DC.SOCKET EYC-221 SERIES

RATING:AC.DC.30V 0.5A
INSULATION RESISTANCE:100MΩ(MIN)
CONTACT RESISTANCE:30mΩ (MAX)
RECOMMENED THICKNESS
EYC 221-1 (1.2) : 1.0~1.2mm
EYC 221-1 (1.5): 1.2~1.5mm

NOTE: TOLERANCES UNLESS OTHERWISE SPECIFIED: ± 0.008/0.2 (in/mm)

REVISION	DESCRIPION	REVISED BY	TOLEANCES .X ±		ANGLE ½°		UNIT	mm	PART NAME	EYC SPEC DRAWING	DWG NO
4			DRAWN BY	Jelly	DESIGNED BY	ERIC	SCALE	2/1			WS1722A
3											
2			CHECKED BY		APPROVED BY		DATE	2011.12.05	PART NO	EYC −221−1 (FP)	
1 2011.12.05	換新圖框,重新出圖	Jelly									