REV	ZONE	REVISION	DATE

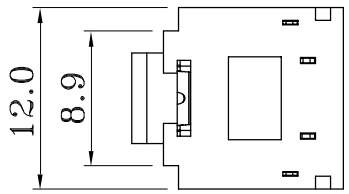

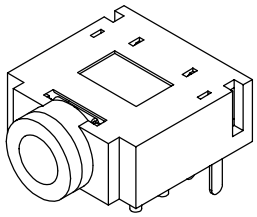

NO.	NAME	MATERIAL	FINISH	Q'TY
1	EARTH TERMINAL	PHOSPHOR BRONZE t=0.25	SILVER PLATED	1
2	TIP SPRING	PBS t=0.25	SILVER PLATED	1
3	TIP SHUNT	BRONZE t=0.3	SILVER PLATED	1
4	RING SPRING	PBS t=0.25	SILVER PLATED	1
5	RING SHUNT	BRONZE t=0.3	SILVER PLATED	1
6	HOUSING	PBT+FIBRE	BLACK	1
7	BUSHING	BRASS	NICKEL PLATED	1

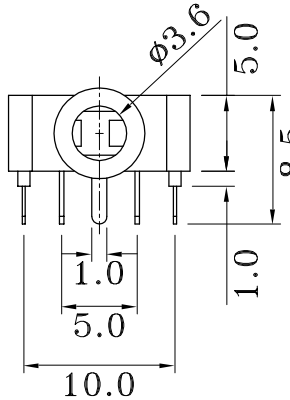

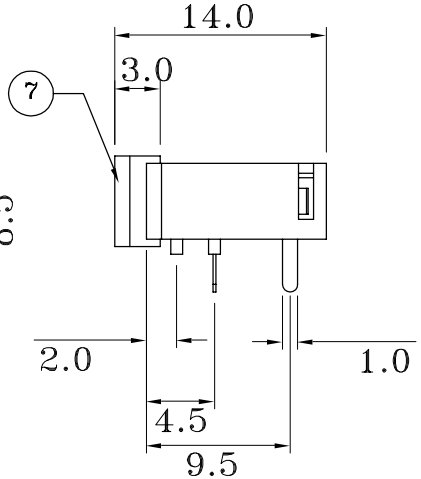

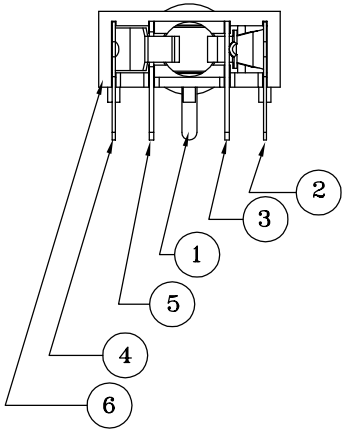

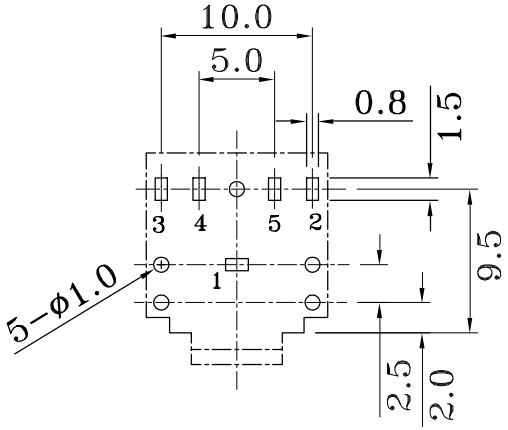

PCB LAYOUT
(BOTTOM VIEW)

SCHEMATIC

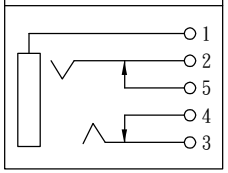

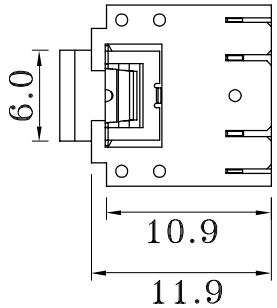

E-YUNG

E-YUNG ENTERPRISE CO., LTD.

COMPUTER NO.	UNIT	SCALE	PART NAME
D:\DWG\PJ-0007A-5	mm	2:1	3.5ø EAR PHONE JACK

MODEL	PJ-0007A-5	PAGE 1 OF 1	APPD.	CKD.	DWG.	DATE	TOLERANCE	PART NO.	REV.
					TINA	23-09-03	±0.3		A