ST-225 (3.5mm)

SERIES

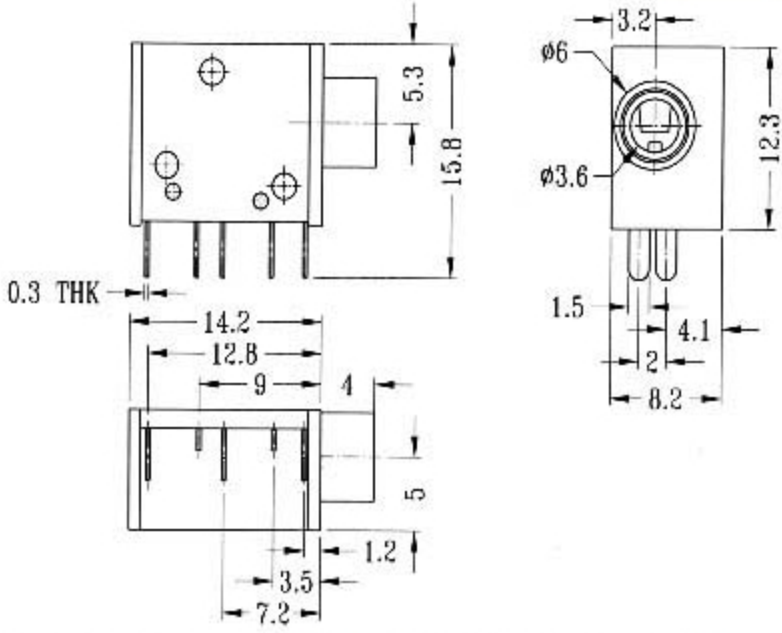

CIRCUIT DIAGRAM

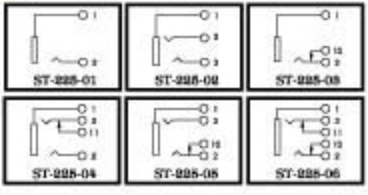

SPECIFICATIONS

Rating : 0.3A 30V DC

Function: STEREO