ST-603 (3.5mm)

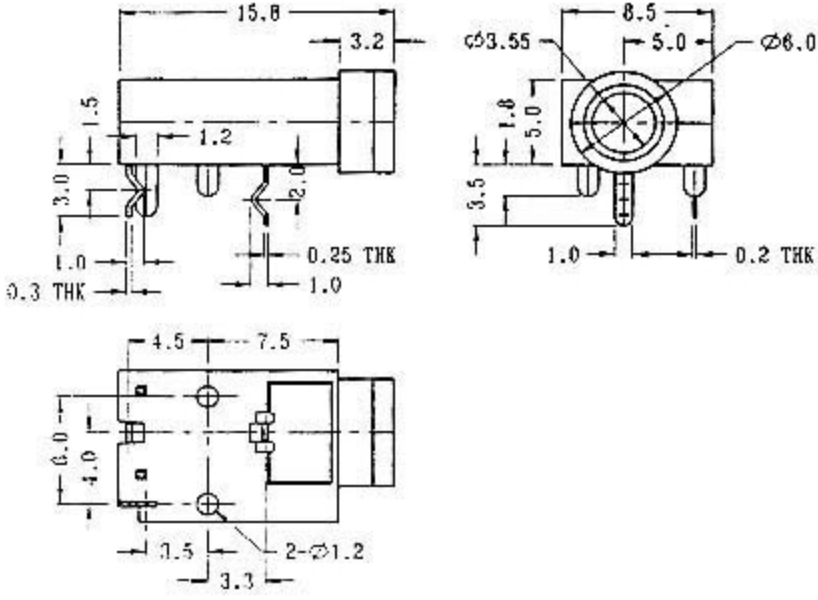

CIRCUIT DIAGRAM

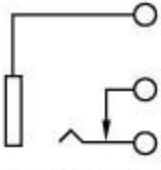

SPECIFICATIONS

Rating : 0.3A 30V DC
Function: MONO